REV.	DESCRIPTION	DRAWN / APPD.	DATE / DATE
	E. R. #6307		
A	REVISED ITEMS 5 & 6 AND ADDED ITEMS 24 & 25. E.C.O. #4551	A. KNAUF / TNICOL	5/27/98 / 5-27-98
B	ADDED ITEMS 26, 27, 28, & 29. E.C.O. # 4578	A. KNAUF / TNICOL	7/30/98 / 8-3-98

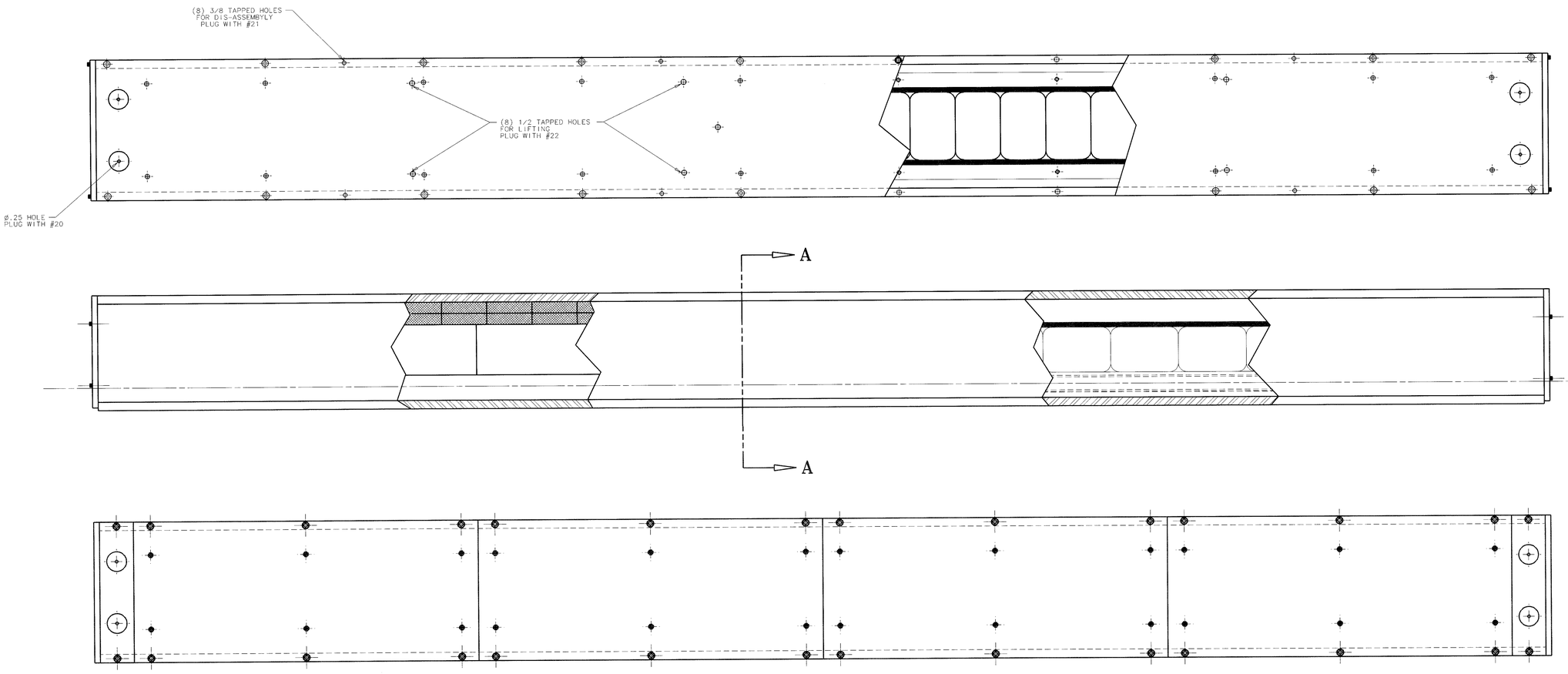

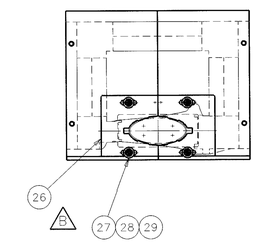

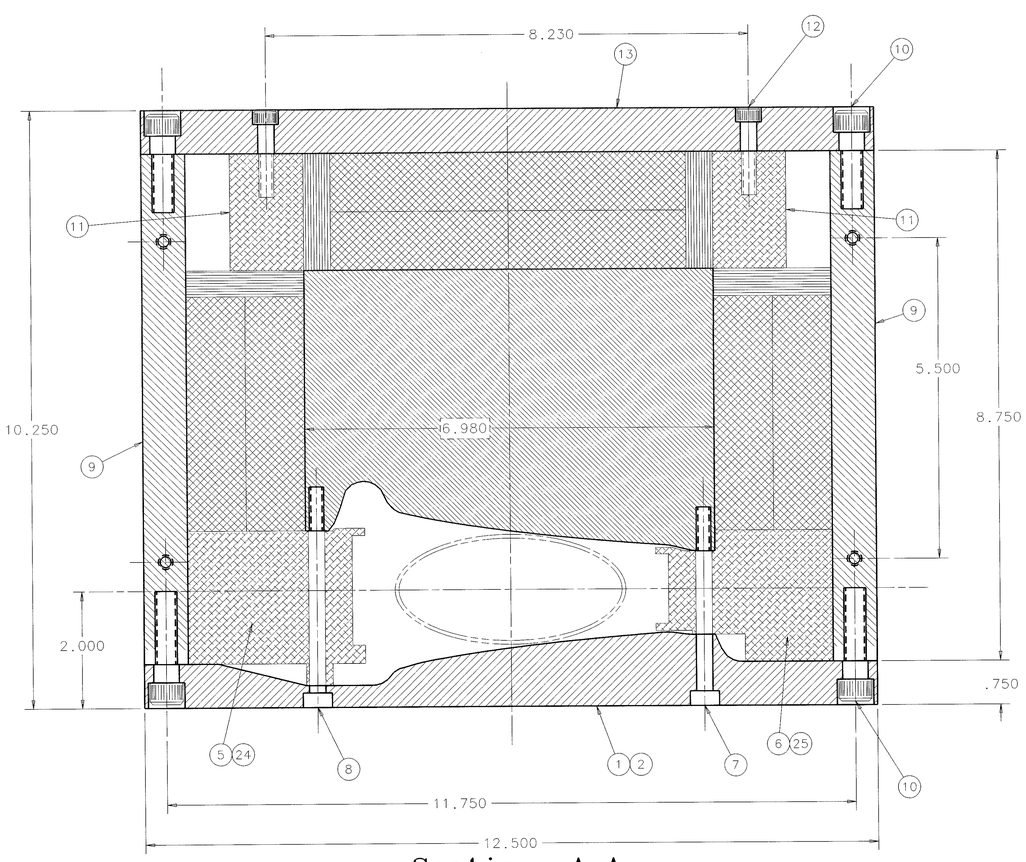

Section A-A

FULL SIZE

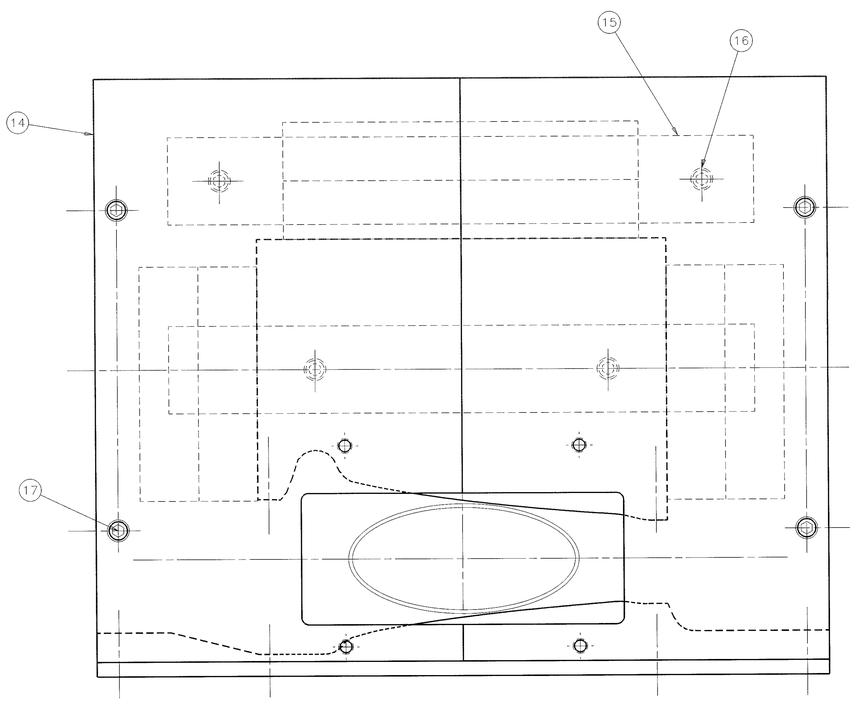

ITEM	PART NO.	DESCRIPTION OR SIZE	QTY.
30			
29	MA-338242	1/4 LOCK WASHWE, STN STL	8
28	MA-338243	1/4 PLAIN WASHER, STN STL	8
27	MA-338224	1/4-20 x .75 LG HEX SOCKET HD CAP SCREW, 18-8 STN STL	8
26	MC-338498	BEAM TUBE SEAL PLATE	4
25	MD-338494	SHORT-RIGHT SIDE ALUMINUM BLOCK	1
24	MD-338493	SHORT-LEFT HAND ALUMINUM BLOCK	1
23	MA-318490	MAGNET IDENTIFICATION LABLE	1
22	MA-338476	#3X CAPLUG, GREEN, (FOR 1/2 DIA TAPPED HOLES)	10
21	MA-338475	#2 CAPLUG, GREEN, (FOR 3/8 DIA TAPPED HOLES)	8
20	MA-338474	#1 CAPLUG, GREEN, (FOR 1/4 DIA DRILLED HOLES)	8
19	MB-338005	FERRITE BRICK (MAGNET), 6 X 4 X 1	140
18	MB-338489	COMPENSATOR STRIP	40
17	MA-338258	1/4-20 x .875 LG SOC HD SCR, ALLOY STL	8
16	MA-338224	1/4-20 x .75 LG SOC HD SCR, STN STL	8
15	MC-341170	END SUPPORT ALUMINUM BAR	4
14	MC-341136	FLUX RETURN END PLATE	2
13	MD-341201	FLUX RETURN TOP PLATE	1
12	MA-338490	1/4-20 x 1.00 LG SOC HD SCR, STN STL	20
11	MC-341202	TOP ALUMINUM SPACER	2
10	MA-338256	3/8-16 x .75 LG SOC HD SCR, ALLOY STL	48
9	MD-341200	FLUX RETURN SIDE	2
8	MA-338492	1/4-20 x 3.50 LG SOC HD SCR, STN STL	24
7	MA-338491	1/4-20 x 3.00 LG SOC HD SCR, STN STL	24
6	MD-341199	RIGHT SIDE ALUMINUM BLOCK	1
5	MD-341198	LEFT HAND ALUMINUM BLOCK	1
4	MD-341194	CENTER POLE SEGMENT	4
3	MA-338225	.25 DIA ROLL PIN x 1.00 LG, STN STL	16
2	ME-341197	BOTTOM POLE & PLATE	4
1	ME-341195	END BOTTOM POLE	2

PARTS LIST

UNLESS OTHERWISE SPECIFIED			ORIGINATOR	M.P.MAY	
.XX	.XXX	ANGLE	DRAWN	T. SCHMITZ	8/7/97
±	±	±	CHECKED		
			APPROVED	TNICOL	5-21-98

1. BREAK ALL SHARP EDGES 1/64 MAX.
2. DO NOT SCALE DRAWING.
3. DIMENSIONS BASED UPON ANSI Y14.5M-1982
4. MAX. ALL MACH. SURFACES √

USED ON

MATERIAL

FERMI NATIONAL ACCELERATOR LABORATORY
UNITED STATES DEPARTMENT OF ENERGY

RECYCLER
MGS - SURPRESSION MIRROR MAGNET ASSEMBLY

SCALE	FILMED	DRAWING NUMBER	REV.
1 : 4 & FULL		8140-ME-341192	B

CADFILE:

CREATED WITH I-DEAS_VI | USER NAME:

DWG_DWGNO: 341192
DWG_PRJNO: 8140
DWG_CATNO: 000
DWG_SIZE: ME
DWG_DESC: RECYCLER-SURPRESS MIRROR MAG-LAYOUT & ASSEMBLY