REV.	DESCRIPTION	DRAWN / APPD.	DATE / DATE
A	ADD .020" TO WIDTH OF POLE. ADD .080" TO WIDTH OF ENCLOSURE.	SCHMITZ / MPM	2/12/96 / 2-96
	DRAWING RELEASED BY TECHNICAL SUPPORT ER #5729		
B	DRAWING UPATED TO REFLECT CHANGES TO DETAILS AND TO INCLUDE PARTS ADDED TO ASSEMBLY(ITEMS 12-24). QUANTITY OF ITEM 10 WAS 42. ITEMS 11, 26, 27, & 28 ADDED. E.C.O. #4078	A.KNAUF / TNICOL	8/8/96 / 8-27-96
C	ADDED MA-393834 TO ITEM #13 IN PARTS LIST. E.C.O.#9636	M.BATTISTA / [signature]	9-NOV-09 / 11-10-09

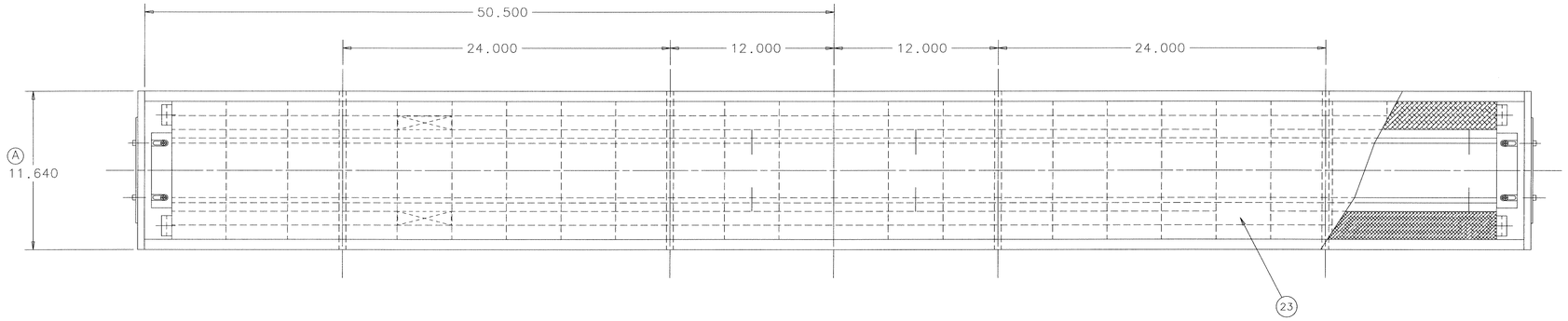

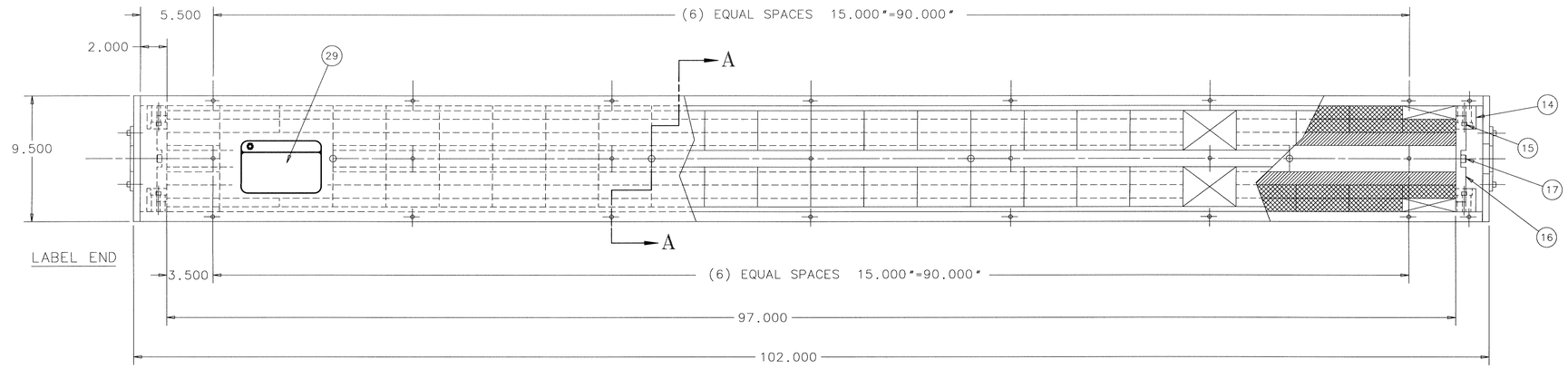

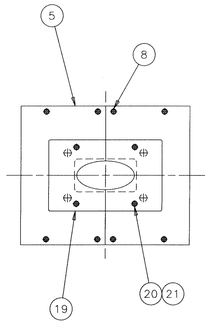

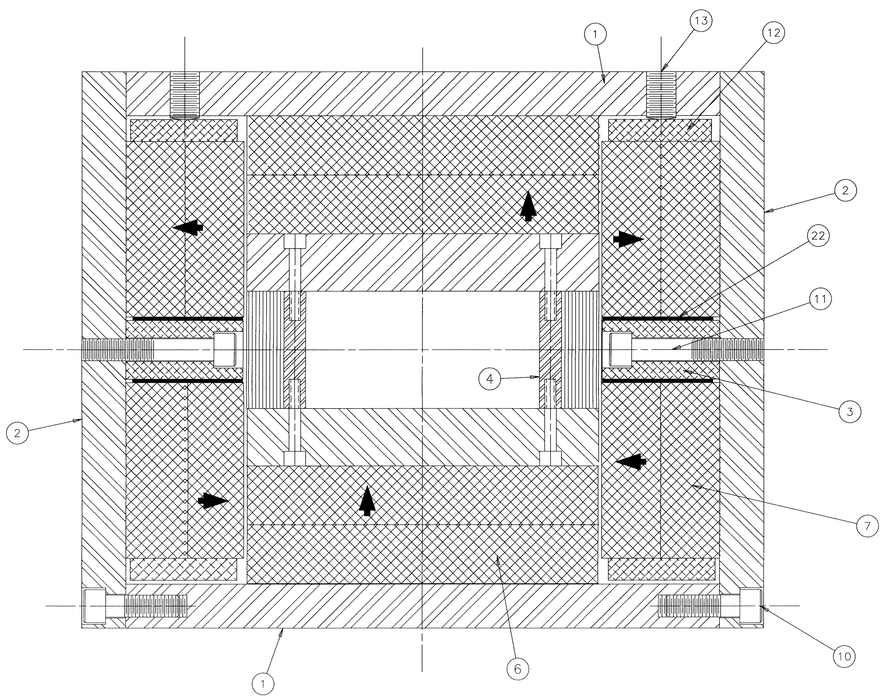

Section A-A

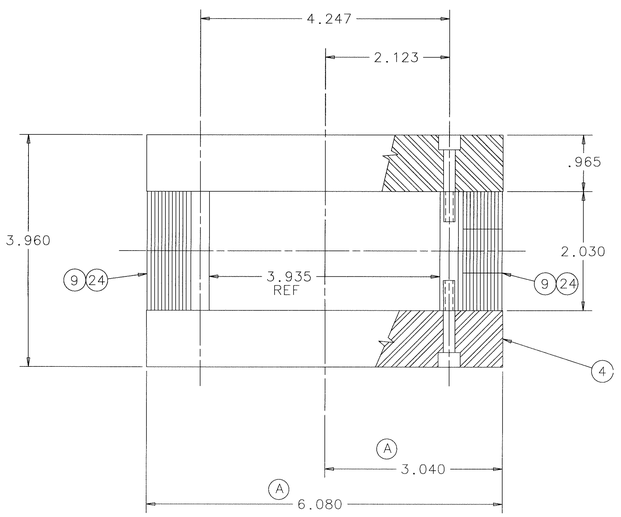

POLE ASSEMBLY

ITEM	PART NO.	DESCRIPTION OR SIZE	QTY.
29	MA-318490	MAGNET IDENTIFICATION LABLE	1
28		3/8-18 NC HEX NUT, 18-8 STN STL	4
27	MA-338153	POSITIONING SCREW	4
26	MB-338137	BEAM TUBE POSITIONING LUG	4
25			
24	MB-338128	ALUM COMPENSATOR REPLACEMENT	AS RED
23	MB-338127	BRICK SPACERS	20
22	MB-338111	SIDE MAGNET SHIM	4
21		1/4 LOCK WASHER	8
20		1/4 FLAT WASHER	8
19		1/4-20 HEX SOCKET HD.CAP SCREW x 1.00 LG.	8
18	MB-338107	BEAM TUBE SEAL PLATE	4
17		3/8-16 HEX SOCKET HD.CAP SCREW x 1.00 LG., 18-8 S.S.	4
16	MB-338106	BRICK RETAINER, SIDES	4
15		1/4-20 NC SOCKET HD. CAP SCREW x 2.00 LG. 18-8 S.S.	8
14	MB-338105	BRICK RETAINER TOP/BOTTOM	4
13	MA-393834	1/2-13 NC x .75 LG. HEX SOCKET SET SCREW, CUP POINT	36
12	MB-338104	CORNER FILLER	4
11		3/8"-16 SOCKET HD. SCREW X 2.00" LG.	28
10		3/8"-16 SOCKET HD. SCREW X 1 1/4" LG.	28
9	MC-341013	COMPENSATOR DETAIL	AS REQ
8		1/4"-20 HHCS X 1 1/4" LG.	16
7	MB-338006	MAGNET BRICK HALF 1" X 3" X 4"	192
6	MB-338005	MAGNET BRICK 1" X 4" X 6"	96
5	MC-341005	END PLATE	2
4	MD-341002	POLE ASSEMBLY	1
3	MC-341004	ALUM SPACER	2
2	MD-341006	SIDE PLATE	2
1	MD-341003	TOP & BOTTOM PLATE	2

PARTS LIST

UNLESS OTHERWISE SPECIFIED			ORIGINATOR	M.P.MAY	
.XX	.XXX	ANGLES	DRAWN	T. SCHMITZ	9/95
±.02	±.005	±0.5°	CHECKED	M.P. MAY	2-27-96
			APPROVED	M.P. MAY	2-27-96

1. BREAK ALL SHARP EDGES 1/64 MAX.
2. DO NOT SCALE DRAWING.
3. DIMENSIONS BASED UPON ANSI Y14.5M-1982
4. MAX. ALL MACH. SURFACES √

USED ON

MATERIAL SEE ABOVE

FERMI NATIONAL ACCELERATOR LABORATORY
UNITED STATES DEPARTMENT OF ENERGY

8 GeV TRANSFER LINE DOUBLE DIPOLE MAGNET MAGNET ASSEMBLY

SCALE	FILMED	DRAWING NUMBER	REV.
FULL		8120.0-ME-341007	C

CADFILE:

CREATED WITH I-DEAS_V1 USER NAME: